# OMNI-707

POYNTING
BEYOND A CONNECTED LIFE

**ANTENNAS | OMNI-707 SERIES**

## OMNI-DIRECTIONAL, DUAL-PORT WI-FI ANTENNA

2400 – 2500 MHz, 5000 – 6000 MHz, 5.5 dBi

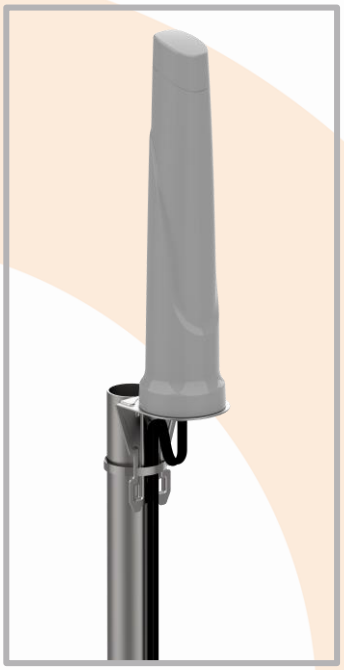

2400 – 2500 MHz
5000 – 6000 MHz

5.5 dBi

Increase
X Mb/s

Omni-
Directional

2.4 – 2.5 GHz
5.0 – 6.0 GHz

Internet of
Things

Machine to
Machine

-40°C to
+80°C

Fire Resistant

Chemical
Protection

IK 10

IP 69K

- **Medium gain, omni-directional Wi-Fi antenna**
- **Suitable for 2.4 GHz and 5 GHz Wi-Fi deployment**
- **Compliant with IEEE 802.11b/g/n and 802.11ac wireless standard**
- **Dual-port configuration to connect multiple Wi-Fi ports**
- **Ideal for IoT and M2M applications**
- **Rugged and low-profile design**
- **High pressure water and dust ingress protected enclosure (IP 69K)**

APPLICATION AREAS

Rural/Farm

Industrial

Mining

Tunnelling

### Product Overview

The OMNI-707 is an omni-directional, dual port Wi-Fi antenna, developed by Poynting Antennas. The OMNI-707 forms part of our new "Rhyno" antenna range, making it rugged and ideal for harsh environments. The antenna offers two dedicated ports for 2.4 GHz and 5 to 6 GHz, respectively, covering the Wi-Fi bands with a peak gain of 5.5dBi. This offers improved performance with a reliable connection. The antenna was designed with superior pattern control over the entire frequency bands of operation.

The OMNI-707 antenna can be connected to any Wi-Fi access point, whether it is older Wi-Fi technology or new dual band Wi-Fi technology. The antenna can be used to resolve channel saturation and provide the ultimate in Wi-Fi performance and flexibility. The antenna can also be used for point-to-point links where there is abundance of RF noise and cluttered environments. The rugged enclosure design offers protection in adverse environmental conditions with an IP 69K and IK 10 rating. The antenna comes with two 0.3 m pigtail N-Type female connectors, which can then be connected to a cable of the desired type and length.

### Features

- Dual port 2.4 GHz and 5 GHz Wi-Fi antenna
- Omni-directional antenna with medium to high gain
- Dual port to connect to separate W-Fi ports
- Easy installation, pole- or wall mountable
- High pressure water and dust proof enclosure (IP 69K)

### Application Areas

- Smart Utilities: Smart Power Metering, Gas & Water Metering
- Smart Buildings: Climate control, access control, security, irrigation
- Smart Environmental & Water Systems
- Industrial factory automation and M2M systems

©2025 Poynting Antennas (Pty) Ltd. All rights reserved
Product Specifications may change without prior notice
Revised: April 2025

Regulatory Compliance: RoHS 2011/65/EU Compliant | ISO 9001:2015
Document version: TS-OMNI-0707-V1-01 REV 2.0
www.poynting.tech

## Frequency Bands

The OMNI-707 is an omni-directional antenna that works from | 2400 – 2500 MHz | and | 5000 – 6000 MHz |

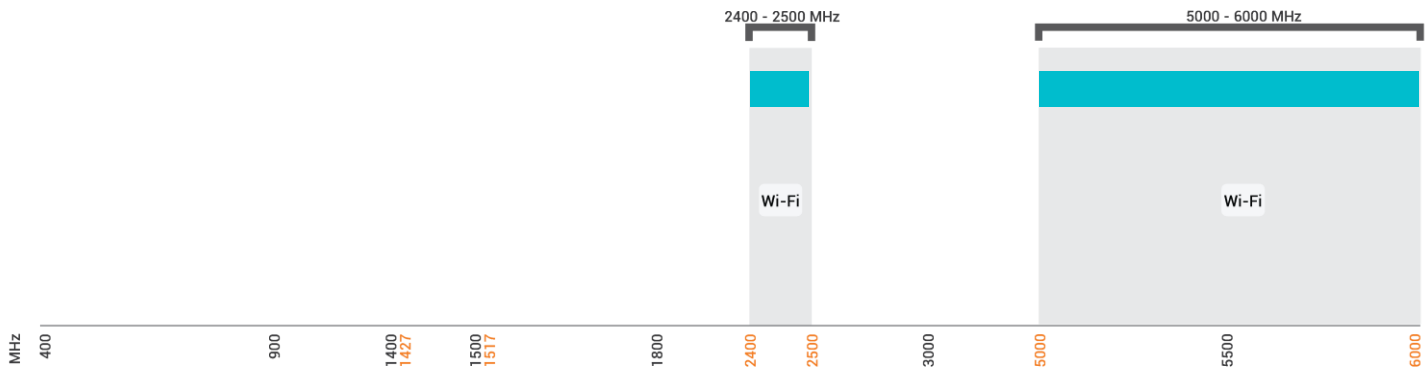


**Indicates the WI-FI bands on which OMNI-707 works**

## Antenna Overview

| | Wi Fi DUALBAND |
|---|---|
| **Ports** | 2 |
| **SISO / MIMO** | SISO |
| **Frequency Bands** | 2400 – 2500 MHz<br>5000 – 6000 MHz |
| **Polarisation** | Linear Vertical |
| **Peak Gain** | 5.5 dBi |
| **Coax Cable Type** | RG-58 |
| **Coax Cable Length** | 300 mm |
| **Connector Type** | N-Type (F) |

**The coax cable & connector are factory mounted to the antenna*


©2025 Poynting Antennas (Pty) Ltd. All rights reserved
Product Specifications may change without prior notice
**Revised:** April 2025

**Regulatory Compliance:** RoHS 2011/65/EU Compliant | ISO 9001:2015
**Document version:** TS-OMNI-0707-V1-01 REV 2.0
www.poynting.tech

POYNTING
BEYOND A CONNECTED LIFE

## Electrical Specifications

| | |
|---|---|
| **Frequency Bands:** | 2400 – 2500 MHz<br>5000 – 6000 MHz |
| **Gain (Max):** | 5 dBi @ 2400 – 2500 MHz<br>5.5 dBi @ 5000 – 6000 MHz |
| **VSWR:** | <1.5:1 |
| **Feed Power Handling:** | 10 W |
| **Input Impedance:** | 50 Ohm (nominal) |
| **Polarisation:** | Linear Vertical |
| **Coax Cable Loss:** | 0.86 dB/m @ 2400 MHz<br>2.1 dB/m @ 5800 MHz |
| **DC Short:** | Yes |

## Product Box Contents

| | |
|---|---|
| **Antenna:** | A-OMNI-0707 |
| **Mounting Bracket (Included):** | Adhesive Disc<br>& L-Bracket (Ø20-70mm Pole) |

## Ordering Information

| | |
|---|---|
| **Commercial Name:** | OMNI-0707 |
| **Order Product Code:** | A-OMNI-0707-V1-01 |
| **EAN Number:** | 6009710923344 |

## Mechanical Specifications

| | |
|---|---|
| **Product Dimensions** | 306 mm x Ø70 mm |
| **Packaged Dimensions** | 386 mm x 80 mm x 96 mm |
| **Weight** | 0.34 kg |
| **Packaged Weight** | 0.625 kg |
| **Radome Material:** | UV Stable ASA |
| **Radome Colour:** | Grey<br>Pantone 429C |
| **Mounting Type:** | Pole, Wall and Surface Mounted |

## Environmental Specifications, Certification & Approvals

| | |
|---|---|
| **Wind Survival:** | ≤190 km/h |
| **Temperature Range (Operating):** | -40°C to +80°C |
| **Environmental Conditions:** | Outdoor/Indoor |
| **Water Ingress Protection Ratio/Standard:** | IP 69K |
| **Salt Spray:** | MIL-STD 810G/ASTM B117 |
| **Operating Relative Humidity:** | Up to 98% |
| **Storage Humidity:** | 5% to 95% - non-condensing |
| **Storage Temperature:** | -40°C to +80°C |
| **Enclosure Flammability Rating:** | UL 94-HB |
| **Impact Resistance:** | IK 10 |
| **Product Safety & Environmental:** | Complies with CE and RoHS standards |


©2025 Poynting Antennas (Pty) Ltd. All rights reserved
Product Specifications may change without prior notice
Revised: April 2025

Regulatory Compliance: RoHS 2011/65/EU Compliant | ISO 9001:2015
Document version: TS-OMNI-0707-V1-01 REV 2.0
www.poynting.tech

## Antenna Performance Plots

### VSWR

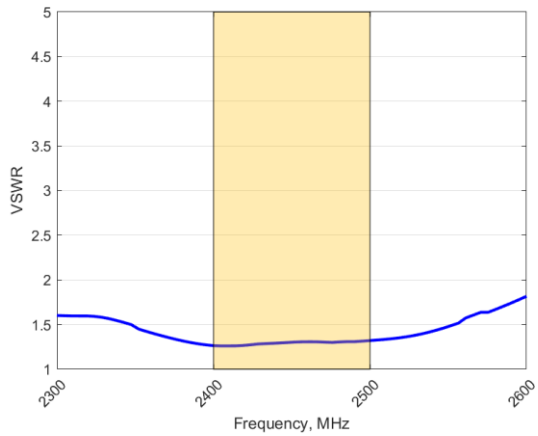


**Voltage Standing Wave Ratio (VSWR)***

VSWR is a measure of how efficiently radio-frequency power is transmitted from a power source, through a transmission line, into a load. In an ideal system, 100% of the energy is transmitted which corresponds to a VSWR of 1:1.

The OMNI-707 delivers superior performance across all bands with a VSWR of <1.5:1.

**VSWR measured without a cable*

### GAIN (EXCLUDING CABLE LOSS)

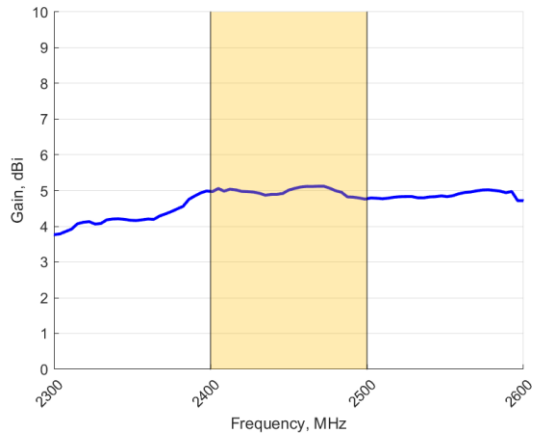


**Gain+ in dBi**

5 dBi is the peak gain across all bands from 2400 – 2500 MHz

Gain @ 2400 – 2500 MHz: 5 dBi

*+Antenna gain measured with polarisation aligned standard antenna*

### VSWR

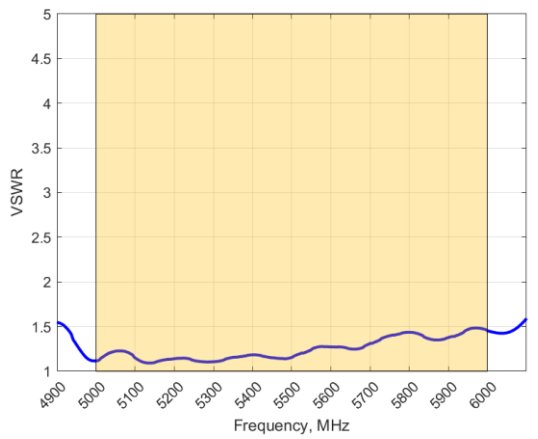


**Voltage Standing Wave Ratio (VSWR)***

VSWR is a measure of how efficiently radio-frequency power is transmitted from a power source, through a transmission line, into a load. In an ideal system, 100% of the energy is transmitted which corresponds to a VSWR of 1:1.

The OMNI-707 delivers superior performance across all bands with a VSWR of <1.5:1.

**VSWR measured without a cable*

### GAIN (EXCLUDING CABLE LOSS)

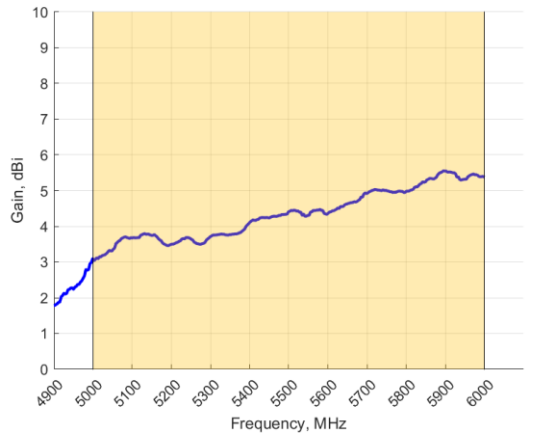


**Gain+ in dBi**

5.5 dBi is the peak gain across all bands from 5000 – 6000 MHz

Gain @ 5000 – 6000 MHz: 5.5 dBi

*+Antenna gain measured with polarisation aligned standard antenna*


©2025 Poynting Antennas (Pty) Ltd. All rights reserved
Product Specifications may change without prior notice
Revised: April 2025

Regulatory Compliance: RoHS 2011/65/EU Compliant | ISO 9001:2015
Document version: TS-OMNI-0707-V1-01 REV 2.0
www.poynting.tech

## Technical Drawings

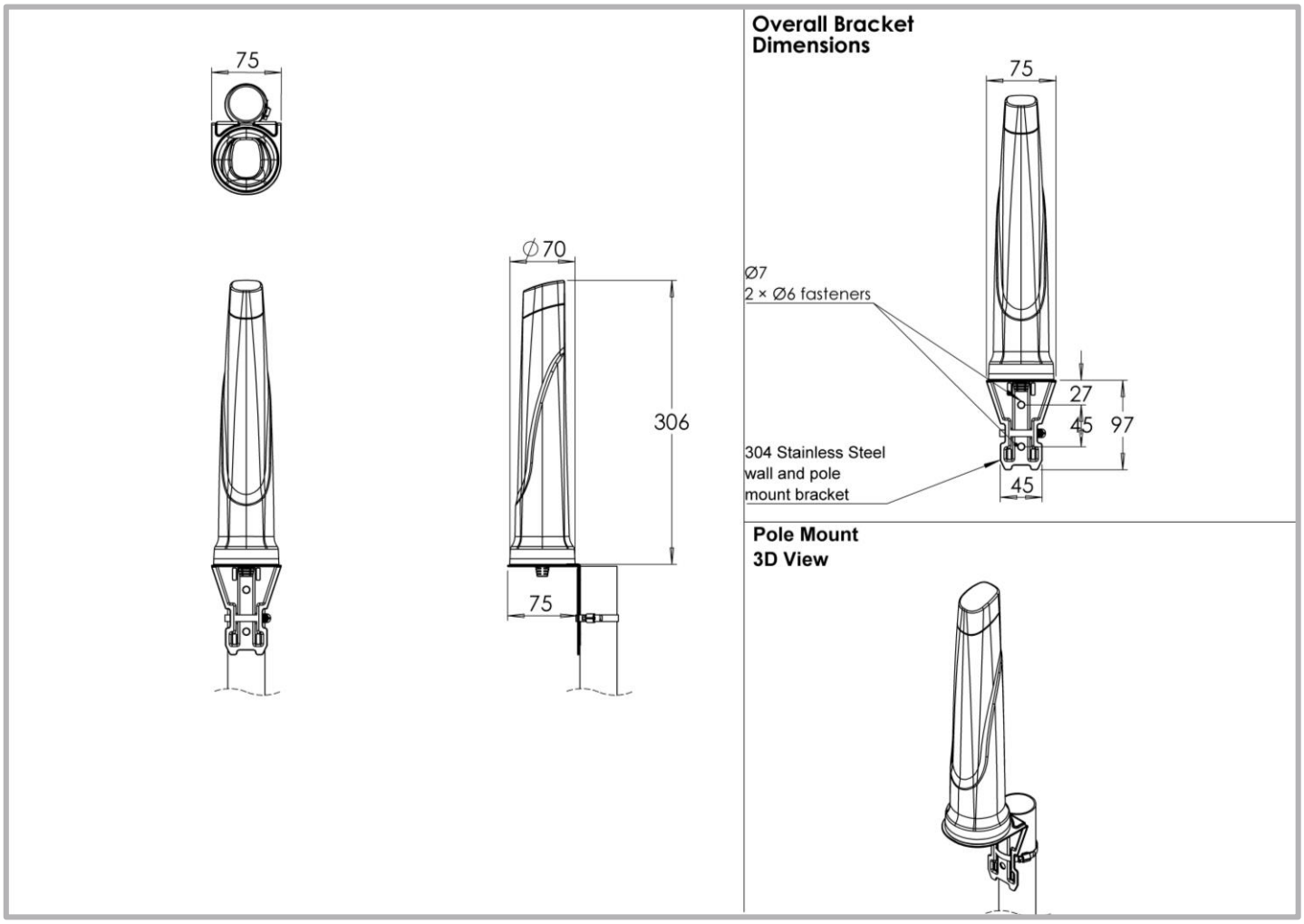



©2025 Poynting Antennas (Pty) Ltd. All rights reserved
Product Specifications may change without prior notice
Revised: April 2025

Regulatory Compliance: RoHS 2011/65/EU Compliant | ISO 9001:2015
Document version: TS-OMNI-0707-V1-01 REV 2.0
www.poynting.tech

## Radiation Patterns

### Azimuth: 2400 – 2500 MHz

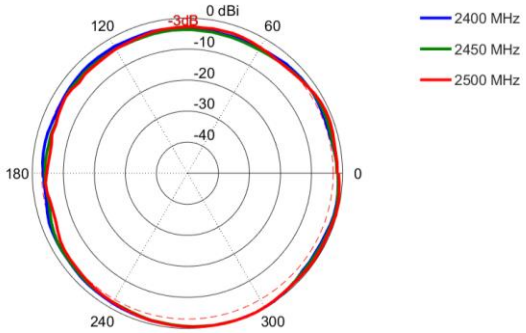


### Azimuth: 5000 – 6000 MHz

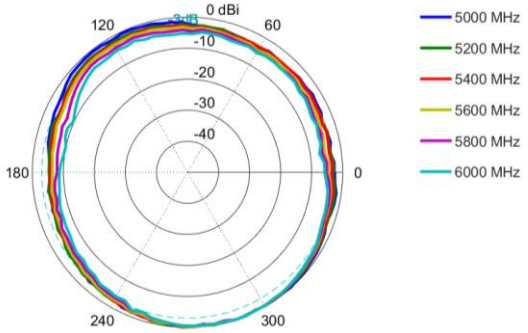


### Elevation: 2400 – 2500 MHz

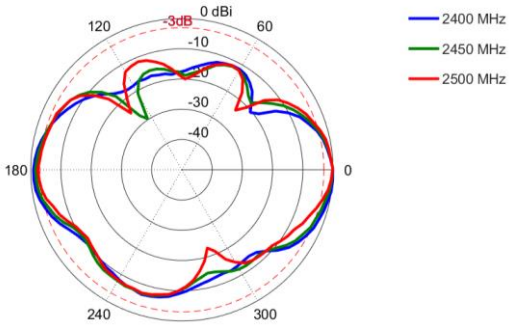


### Elevation: 5000 – 6000 MHz

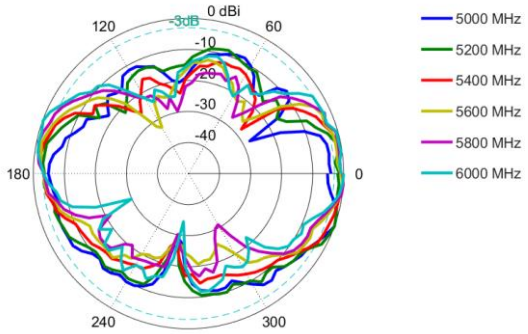



©2025 Poynting Antennas (Pty) Ltd. All rights reserved
Product Specifications may change without prior notice
Revised: April 2025

Regulatory Compliance: RoHS 2011/65/EU Compliant | ISO 9001:2015
Document version: TS-OMNI-0707-V1-01 REV 2.0
www.poynting.tech

## Mounting Options

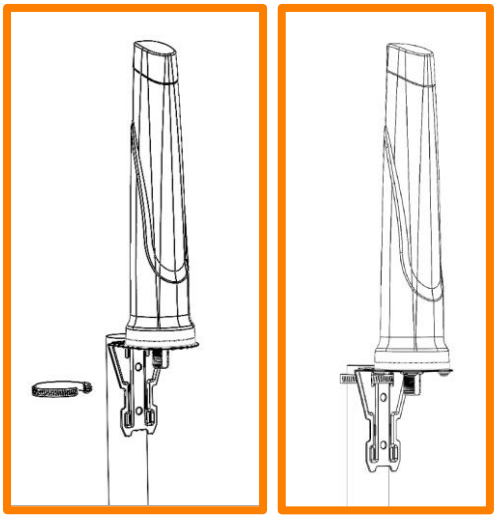

**Pole Mount**

Pole mounted using included L-Bracket and cable clamp

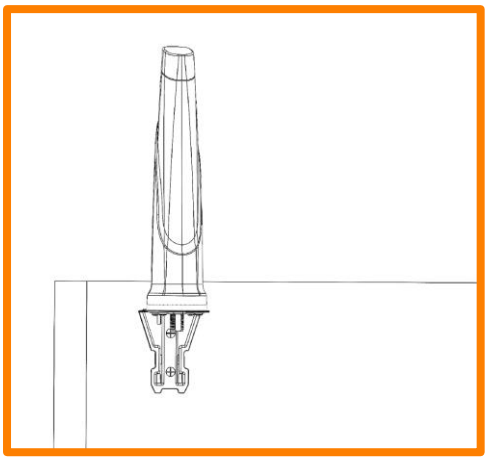

**Wall Mount**

Wall/Cabinet mounted using included L-Bracket

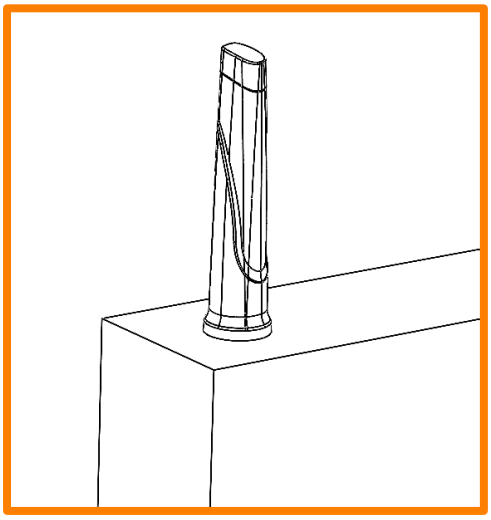

**Surface Mount**

Surface mounted using included adhesive disc


©2025 Poynting Antennas (Pty) Ltd. All rights reserved
Product Specifications may change without prior notice
Revised: April 2025

Regulatory Compliance: RoHS 2011/65/EU Compliant | ISO 9001:2015
Document version: TS-OMNI-0707-V1-01 REV 2.0
www.poynting.tech

## Additional Accessories

See accessories technical specifications on www.poynting.tech


### CONTACT POYNTING

**Poynting Antennas (Pty) Ltd - Head Office**
Unit 4, N1 Industrial Park,
Landmarks Avenue,
Samrand, 0157, South Africa
**Phone:** +27 (0) 12 657 0050
**E-mail:** info@poynting.tech
**International Email:** sales-global@poynting.tech

**Poynting Europe**
Regus Business Center Neue Messe Riem
Kronstadter Straße 4
81677 München
Germany
**Phone:** +49 89 7453 9002
**E-mail:** sales-europe@poynting.tech

**Poynting USA**
1804 Owen Court, Suite 104,
Mansfield,
TX 76063
USA
**Phone:** +1 817 533-8130
**E-mail:** sales-us@poynting.tech