Date
March 13, 2020

Released

- Specification -

Outdoor
250W AC/DC
Power Supply Unit(PSU)

Model No. NJZ1289

Input AC Voltage Range: 100 to 240 V
Output DC Power: 250 W
Output DC Voltage: +48 VDC

Copyright ©
New Japan Radio Co., Ltd.
Microwave Division

-Notice of Proprietary Information-
This document and contents are proprietary to New Japan Radio Co., Ltd.
This publication and contents may not be reproduced or distributed for any other purpose
without the written permission of New Japan Radio Co., Ltd.
Specifications listed in this document are subject to change at any time, without notice.

Caution

1. While New Japan Radio., Ltd.(NJR) continually strives to improve the quality and reliability of any products, failures would occur in microwave products over time. For this reason, it is important that customers fulfill their responsibilities to ensure designed-in safety – including failsafe functions, redundancy, and measures to prevent malfunctions and the spread of fire – in order to avoid injuries, accidents, or social repercussions resulting from the failure of any product related to satellite communications on this document (hereinafter, "the product"). Customers must pay careful attention to ensuring the safety of their equipment.
2. The product is designed and tested to function in accordance with its specifications. Do not use under conditions that deviate from the product specifications included in the specifications. NJR assumes no responsibility and shall not be liable for any injuries, accidents, or social repercussions resulting from the product being in a poor or damaged state because it was used under conditions that depart from the specifications.
3. The product is covered by a warranty for one year following delivery unless otherwise stipulated in the contract or delivery conditions. In the event of a failure for which NJR are responsible occurring during the warranty period, NJR undertake to repair or replace the product free of charge. Note, however, that the warranty does not cover failures such as those listed here (see bullets below), even if they occur within the warranty period. In addition, in the case of a product being repaired or replaced by us, the starting date for the warranty period is still the original delivery date of the product.
   - Failure due to the product being used in conditions other than those stipulated in the data sheet, specification sheet, etc.
   - Failure due to modifications or repairs carried out by some entity other than our company
   - Failure determined to be the result of unsuitable maintenance or replacement of a consumable item that requires due maintenance
   - Failure due to circumstances that were unforeseeable given the scientific/technological standards at the time of shipment
   - Other failures due to external factors such as fire, earthquake, flood and power supply anomalies for which NJR are not responsible

   In addition, the product warranty is limited to the provision of repair services or replacement at no cost. It does not cover secondary damage (to equipment, business opportunities, profits, etc.) or any other damage that may have resulted from failure of the product.
4. The product must be handled appropriately to ensure its continued reliability. Since it can be damaged by the intrusion of water, dust, oil, chemicals, etc., it must be given appropriate protection. Even in the case of a product with an airtight construction, avoid using it in an environment that exceeds the stated levels of waterproofing/dustproofing. Also, be sure to use connectors and waveguides properly.

   If replacement parts such as fans are included, proper maintenance is necessary. To maintain product performance and functionality, it is necessary to conduct inspections and maintenance at appropriate intervals and exchange replacement parts when necessary. Improper inspections or maintenance may result in failure.

   In addition, the warranty does not cover the use of the product in areas where salt damage can be expected or where there is a substantial presence of corrosive gases such as Cl_2, H_2S, SO_2, and NO_2. If the product is to be used in such areas, at the time of installation you must take appropriate steps to protect the product.
5. If the product is to be used with equipment/systems that must meet special quality and reliability standards (aerospace equipment, medical equipment, power generation control equipment, automotive/railway transportation equipment, safety equipment, disaster prevention and security equipment, etc.), please consult with our sales staff in advance.
6. This product contains gallium arsenide (GaAs), classified as a harmful substance. To avoid danger, do not incinerate, crush, or chemically treat the product in such a way that gases or dust are released. When disposing of the product, comply with all applicable laws and regulations and do not treat it as general industrial waste or household waste.
7. When exporting a product or technology, observe export laws and regulations such as those governing foreign exchange and foreign trade, and obtain any necessary licenses for export, service transactions, etc. NJR request that you do not use our products or the technical data published on this document for developing weapons of mass destruction or for any other military purposes or applications.
8. The product specifications in this document are subject to change without notice. If you are considering using a product, delivery specifications must first be settled.

＊Above specifications are subject to change without notice.

Scope

This Power Supply Unit(PSU) is intended for the satellite communication data uplink application in C-band and Ku-band.

The features of the PSU are to provide the stable +48V DC power with up to 250W capacity to use the high power BUCs of DC power operation. The unit employs the aluminum housing with corrosion-proof treatment on the surface and has waterproof and dust-proof constructor in order to use perfectly as the outdoor unit.

In addition the PSU complies with EC DIRECTIVE.

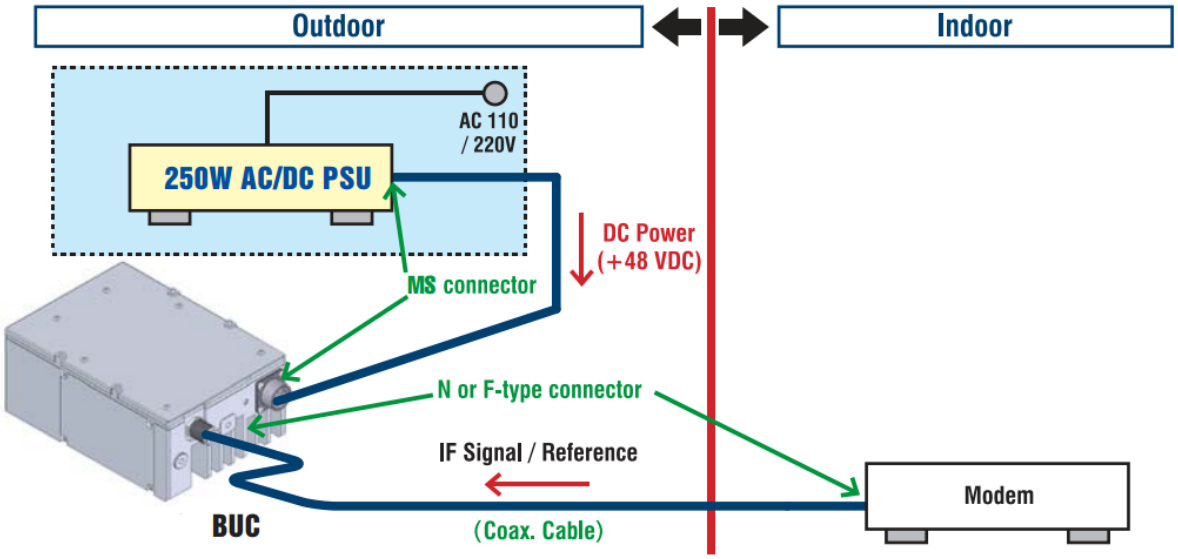

Fig.1 Connection Block Diagram

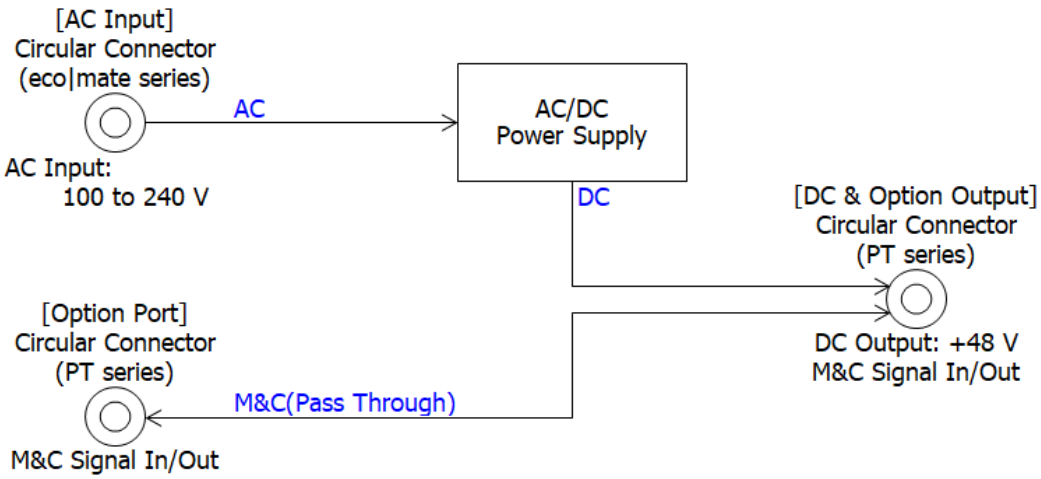

Fig.2 Functional Block Diagram

＊Above specifications are subject to change without notice.

Series Model Number

- Line-up

Model No.	Output DC Voltage	Output DC Capacity	Cooling Type	Usage Type
NJZ1289	+48 V nom.	250 W max.	Convection Air Cooling	Outdoor
NJZ1295	+51 V nom.	500 W max.	Forced-air-cooled by Fan	

＊Above specifications are subject to change without notice.

1. Electrical Specifications

#	Items	Specifications
1.1.	Input AC Voltage Range [Rated Range] [Absolute Maximum Rating]	 100 to 240 VAC 90 to 264 VAC
1.2.	Input AC Frequency Range	50/60 Hz
1.3.	Input AC Current	3.6 A max.
1.4.	Output Voltage	+48 VDC nom.*Note 1
1.5.	Output Current	5.5 A max.
1.6.	Efficiency	90 % typ.*Note 2
1.7.	Maximum Output Power	250 W
1.8.	Power Factor	0.94 typ.*Note 2

*Note1: Voltage ripple corresponding to output power arises.

*Note2: The conditions are 100 VAC as AC voltage input and 200 W as output power load.

2. Mechanical Specifications

#	Items	Specifications
2.1.	Input Interface [AC Input]	Unit Connector: C016 20C003 200 12 Mating Connector: C016 20D003 210 12 [Amphenol eco|mate Connector] Assignment: **Pin 1: Live AC input** **Pin 2: Nutral AC input** **Pin 3: N.C.** **Pin PE: Frame Ground (GND)**
	[Option Port]	Unit Connector: PT02E-12-8P(025) Mating Connector: PT06E-12-8S(470) [Amphenol PT Connector] Assignment: 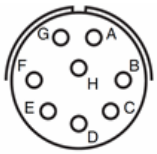 **Pin A: Through Pin A in Output MS cnnector** **Pin B: Through Pin B in Output MS cnnector** **Pin C: Through Pin C in Output MS cnnector** **Pin D: Through Pin D in Output MS cnnector** **Pin E: Through Pin E in Output MS cnnector** **Pin F: Through Pin F in Output MS cnnector** **Pin G: Through Pin G in Output MS cnnector** **Pin H: Through Pin H in Output MS cnnector**
2.2.	Output Interface [DC & Option Output]	Unit Connector: PT02E-14-12S(025) Mating Connector: PT06E-14-12P(470) [Amphenol PT Connector] Assignment: 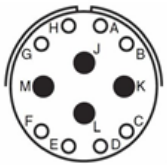 **Pin A: Through Pin A in Input MS cnnector** **Pin B: Through Pin B in Input MS cnnector** **Pin C: Through Pin C in Input MS cnnector** **Pin D: Through Pin D in Input MS cnnector** **Pin E: Through Pin E in Input MS cnnector** **Pin F: Through Pin F in Input MS cnnector** **Pin G: Through Pin G in Input MS cnnector** **Pin H: Through Pin H in Input MS cnnector** **Pin J: DC Output (+) / Prime** **Pin K: DC Output (-) / Return** **Pin L: N.C.** **Pin M: N.C.**
2.3.	Dimension & Housing without Interface Connectors	186(L) x 133(W) x 60(H) mm [7.33″ (L) x 5.24″ (W) x 2.36″ (H)]
2.4.	Weight	1.6 kg [3.5 lbs]
2.5.	Surface Finish [Protective & Conformal Coating] [Finish Paint]	 Trivalent Chromate Treatment Acrylic Paint, Ivory Color
2.6.	Cooling	Convection Air Cooling

＊Above specifications are subject to change without notice.

3. Environmental Specifications

#	Items	Specifications
3.1.	Temperature Range (Ambient) [Operating] [Storage]	 -40 to +55 ºC -40 to +75 ºC
3.2.	Humidity	0 to 100 %Rh
3.3.	Vibration (Survival)	5 G [49.03 m/s^2] (3 axis, 50 Hz to 2 kHz) 1 mm p-p (3 axis, 5 to 50 Hz)
3.4.	Shock (Survival)	30 G [294.2 m/s^2] (3 axis)
3.5.	Dust/Waterproof (IP Code Rating)	IP67*Note 3
3.6.	Regulations	EU Directive (CE Marking) EMC - 2014/30/EU Low Voltage - 2014/35/EU RoHS - 2011/65/EU + (EU)2015/863
3.7.	Compliance Standard [Safety] [EMC]	 IEC60950-1:2005 (2nd Edition) EN60950-1:2006 EN61000-3-2 (Harmonic Current Emission Test) EN61000-3-3 (Voltage Fluctuations and Flicker Test) EN61000-4-2 (ESD Test) EN61000-4-3 (Radio-Frequency Electromagnetic Field Test) EN61000-4-4 (Electrical Fast Transient/Burst Test) EN61000-4-5 (Surge Test) EN61000-4-6 (Conducted Disturbance Radio-Frequency Test) EN61000-4-8 (Power Frequency Magnetic Field Test) EN61000-4-11 (Voltage Dips and Interruptions Test)
3.8.	MTBF (by Method of Parts Count Reliability Prediction)	100,000 hours and more at +55 ºC as Design Condition

*Note3: Conditioned on connection with all of enclosed mating connectors.

4. Outline Drawing

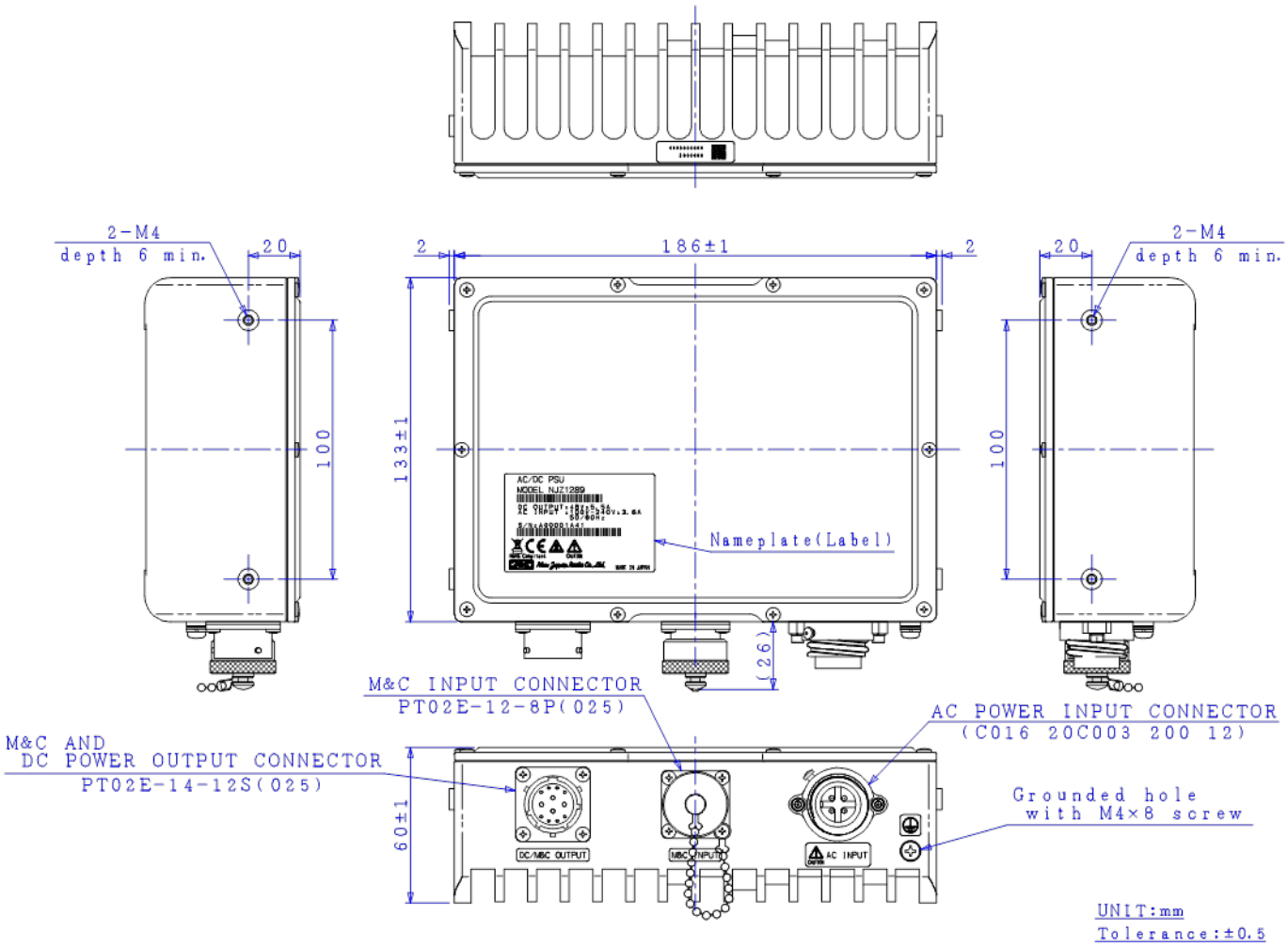

CAUTION

Items	Description
Hot Surface	Whole of body and heat sink is hot when this unit is powered, and even after power is disconnected until it is cooled down. Do not touch hot surface to avoid a burn hazard.
Waterproof	Install all of mating connectors correctly and securely. Do seal all of cable connection points from the connector to the cable sheath by usage of self-amalgamating tape.

＊Above specifications are subject to change without notice.

5. Label

5.1. Label Outline

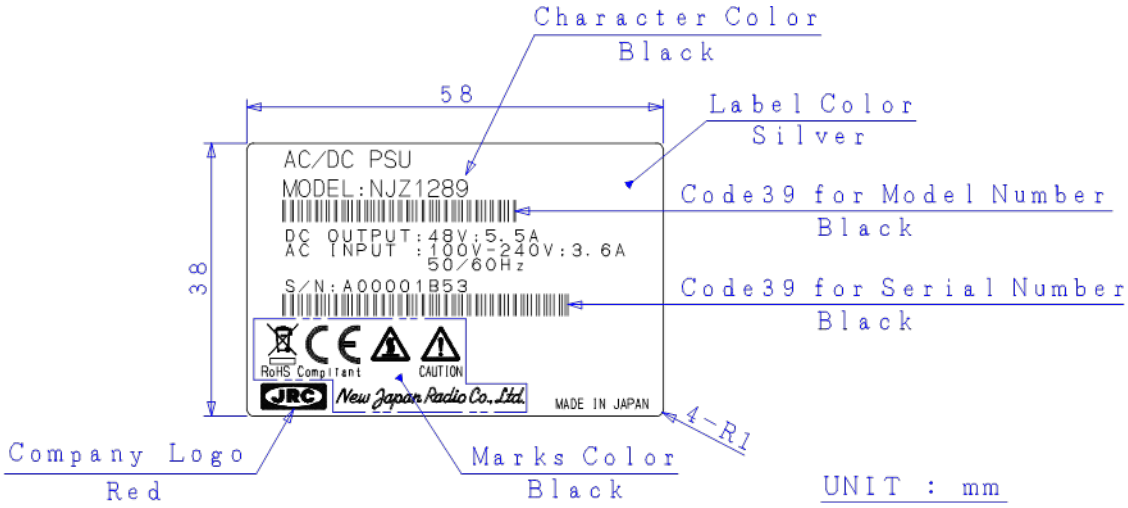

5.2. Definitions

Serial Number (OSSSSSRYM) - ALPHANUMERIC (9 characters)

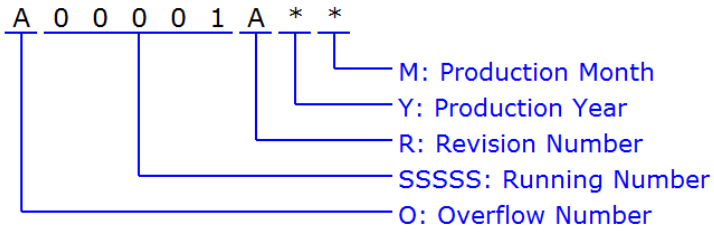

O: Overflow Number - ALPHABET (1 character)
"A" to "Z", e.g.: A99999 ⇒ B00001

SSSSS: Running Number - NUMBER (5 digits)
"00001" to "99999"

R: Revision Number - ALPHABET (1 character)
"A" to "Z"

Y: Production Year - NUMBER (1 digit)
Calendar Number, e.g.: 2009:9, 2010:0, 2011:1, 2012:2 ····

M: Production Month - ALPHANUMERIC (1character)
"1" to "9", "X" as October, "Y" as November, "Z" as December

∗Above specifications are subject to change without notice.

6. Package

6.1. Shipping Package

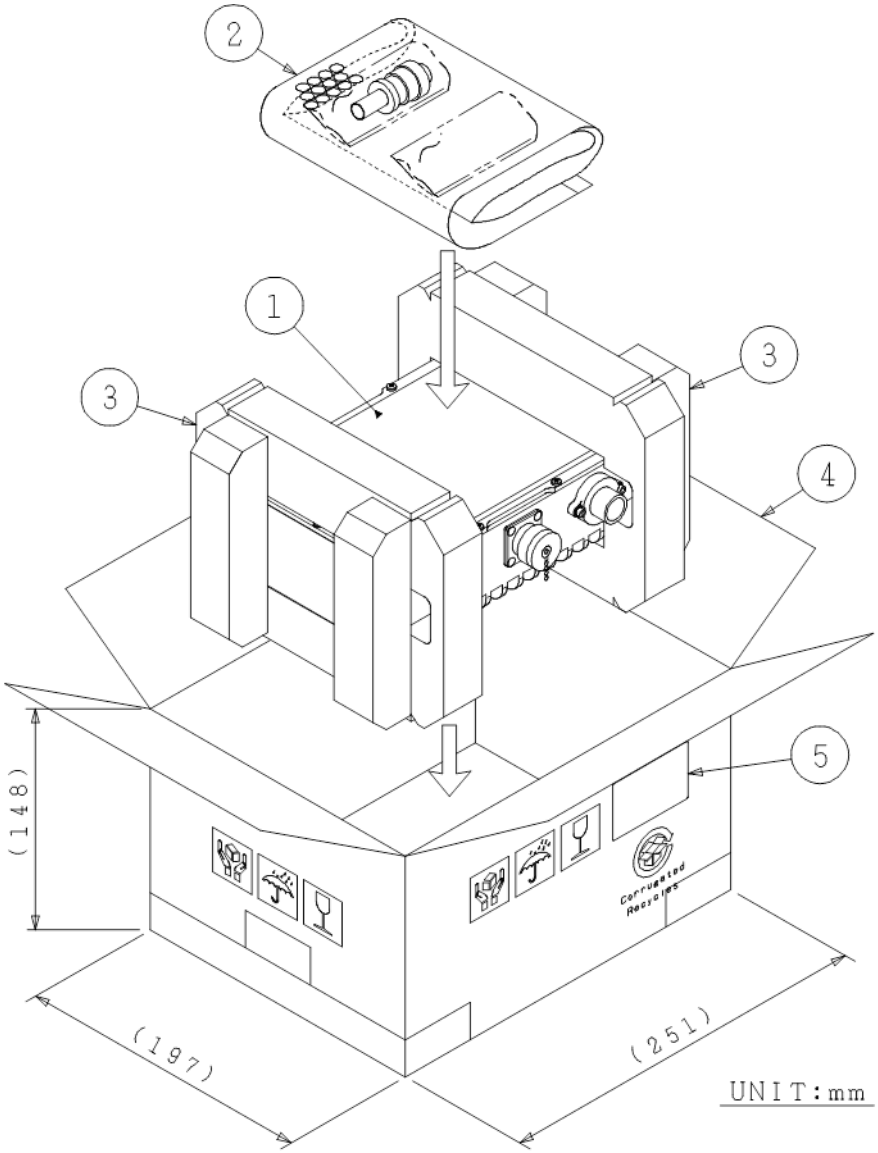

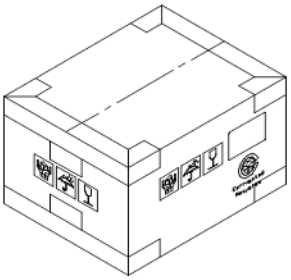

①:BUC
②:Accessories
・MS mating connector
PT06E-14-12P-470:1piece
・AC mating connector
C016 20D003 210 12:1piece
③:Polyethylene foam for package cushioning
④:Double-faced corrugated fiberboard
⑤:Label

＊Above specifications are subject to change without notice.

6.2. Enclosed Accessories

- Circular Connector, Qty (1), Mating Connector for AC Input,
  C016 20D003 210 12 [Amphenol eco|mate Connector]
- Circular Connector, Qty (1), Mating Connector for DC & Option Output,
  PT06E-14-12P(470) [Amphenol PT Connector]

7. Handling Precautions

7.1. DANGER

DANGER

This statement indicates an imminently hazardous situation which, if not avoided, will result in death or serious injury.

Items	Description
Input Voltage	Only input a AC voltage within the range indicated in specifications. Do operate with the input voltage range between 100 and 240 V AC power with 50/60 Hz of AC frequency. When applying higher voltage than specifications (264 V as absolute maximum rating), it will not only cause this unit failure, but it may also result in electric shock and fire.
Disassembling	Do not disassemble the unit. Disassembling will not only cause this unit failure, but it may also result in electric shock.

7.2. WARNING

WARNING

This statement indicates a potentially hazardous situation which, if not avoided, could result in death or serious injury.

Items	Description
Hot Surface	Whole of body and heat sink is hot when this unit is powered, and even after power is disconnected until it is cooled down. Do not touch hot surface to avoid a burn hazard.

7.3. CAUTION

CAUTION

This statement indicates a potentially hazardous situation which, if not avoided, could result in minor or moderate injury. The statement may also be used to indicate other unsafe practices or risks of property damage.

Items	Description
Connection	DC power of +48 V will output at DC output interface connector. Do not connect the other than cable connected from the +48V operable BUC. The connected equipment may be damaged when cable connecting modem, the BUC other than the +48V operable BUC, or other equipment.

＊Above specifications are subject to change without notice.

7.4. NOTE

NOTE

This statement is used to notify of installation, operation, or maintenance information that is important, but not hazard-related.

Items	Description
Mounting	Do not block fins of this unit to keep the heat dispassion performance. Normally the unit should be mounted with long fins face up.
Grounding	To reduce the risk of damage or broken by lightning surge, the unit should be grounded by connecting the ground wire.
Torque Management	Do not tighten with excessive torque when attaching screws/bolts. The following value as tighten torque is recommended. ■ Screws/Bolts - M4: 1.15 to 1.4 N·m
Weatherproof	The unit mounted in outdoor should be conducted with adequately weatherproof procedure. Install all of mating connectors correctly and securely. Do seal all of cable connection points from the connector to the cable sheath by usage of self-amalgamating tape.
Input Voltage	Do operate with the input voltage range between +100 and +240 V AC power. Avoid applying more than the maximum voltage in this range under any conditions.
High Temperature Operation	It may cause damage and/or degradation of reliability / lifetime to operate the unit in a condition where the ambient temperature exceeds the maximum value, +55 °C, at operating temperature described in the specifications.
Vibration / Shock	When vibration and/or shock impact exceeding the conditions described in the specifications is applied, internal parts may be damaged.
Warranty	The unit is covered by a warranty for one(1) year following delivery unless otherwise stipulated in the contract or delivery conditions. Repairs may be possible under payment of charge even for the unit whose warranty period has expired. Opening, removing, disassembling and modifying any parts and components (including the product label, sealing tape and screws) without fan equipment will immediately void the warranty. In any case, the unit of invalid warranty cannot be repaired.

＊Above specifications are subject to change without notice.

8. Instructions Manual

8.1. Descriptions

This section describes the information of Connectors and etc.

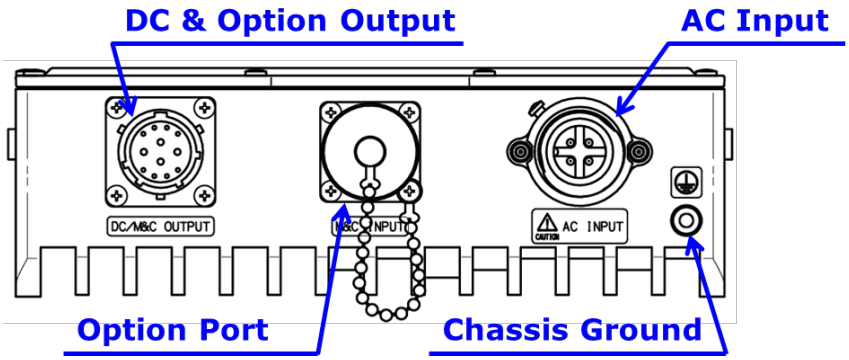

Items	Description	Purpose
AC Input	C016 20C003 200 12 [Amphenol/3pins+PE, male]	100 to 240 V AC power input.
DC & Option Output	PT02E-14-12S(025) [Amphenol/12 pins, male]	DC power (+48 V nominal) is output, and signal of serial interface M&C such as RS-232C of BUC as option is output.
Option Port	PT02E-12-8P(025) [Amphenol/8 pins, male]	The waterproof cap is fixed as default. When serial interface M&C such as RS-232C of BUC is used, the signal will pass through from the connector of DC & Option Output to this connector.
Chassis Ground	M4 Screw Hole	Common chassis ground / frame ground.

8.2. Basic Connection Overview

e.g.) for Ku 16W BUC: NJT8319 series

8.2.1. Connection Overview between BUC and PSU

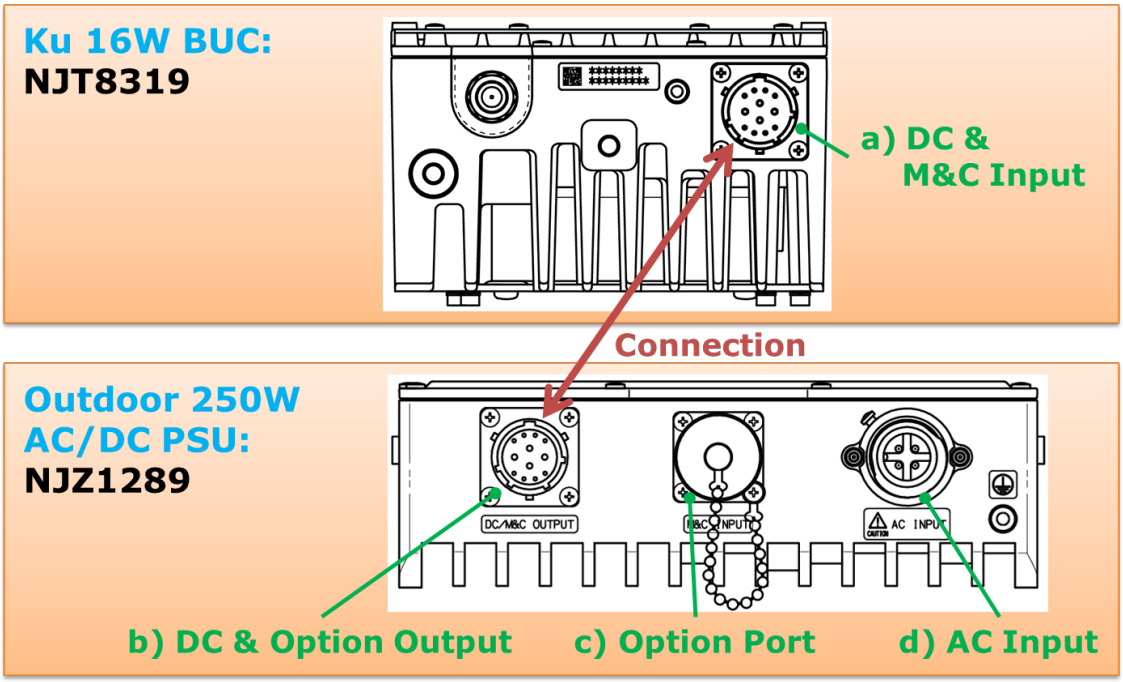

＊Above specifications are subject to change without notice.

8.2.2. Connector Pin Assignment

a) DC & M&C Input at NJT8319 (Ku 16W BUC)

Unit Connector: PT02E-14-12P(025) [Amphenol / 12 pins, male]

Mating Connector: PT06E-14-12S(470) [Amphenol / 12 sockets, female]

** Mating connector is enclosed in the shipping package of NJT8319*

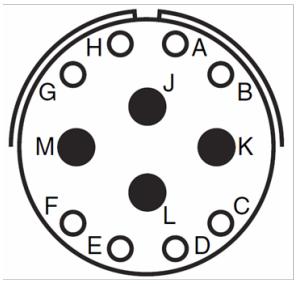

Pin No.	Item	Description
A	N.C.	-
B	N.C.	-
C	N.C.	-
D	N.C.	-
E	RS-232C GND	*Available to use with RS-232C M&C option*
F	N.C.	-
G	RS-232C TxD	*Available to use with RS-232C M&C option*
H	RS-232C RxD	*Available to use with RS-232C M&C option*
J	DC Input (+)	Prime: +36 to +60 V / DC Voltage
K	DC Input (-)	Return: GND
	RS-232C GND	*Available to use with RS-232C M&C option*
L	N.C.	-
M	N.C.	-

b) DC & Option Output at NJZ1289 (250W AC/DC PSU)

Unit Connector: PT02E-14-12S(025) [Amphenol / 12 sockets, male]

Mating Connector: PT06E-14-12P(470) [Amphenol / 12 pins, female]

** Mating connector is enclosed in the shipping package of NJZ1289*

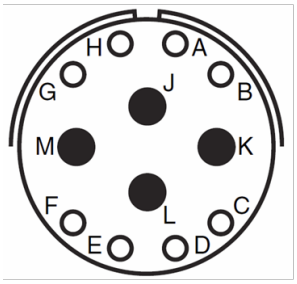

Pin No.	Item	Description
A	N.C.	Through Pin A in (c)'s MS connector
B	N.C.	Through Pin B in (c)'s MS connector
C	N.C.	Through Pin C in (c)'s MS connector
D	N.C.	Through Pin D in (c)'s MS connector
E	RS-232C GND	Through Pin E in (c)'s MS connector
F	N.C.	Through Pin F in (c)'s MS connector
G	RS-232C TxD	Through Pin G in (c)'s MS connector
H	RS-232C RxD	Through Pin H in (c)'s MS connector
J	DC Output (+)	Prime: +48V typical, DC Voltage
K	DC Output (-)	Return: GND
L	N.C.	-
M	N.C.	-

c) Option Port at NJZ1289 (250W AC/DC PSU)

Unit Connector: PT02E-12-8P(025) [Amphenol / 8 pins, male]

Mating Connector: PT06E-12-8S(470) [Amphenol / 8 sockets, female]

** Product connector is covered by the waterproof cap.*

** When mating connector is needed, order it together with NJZ1289*

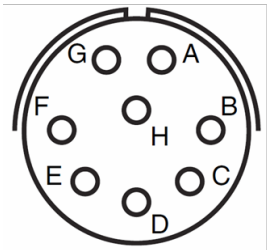

Pin No.	Item	Description
A	N.C.	Through Pin A in (b)'s MS connector
B	N.C.	Through Pin B in (b)'s MS connector
C	N.C.	Through Pin C in (b)'s MS connector
D	N.C.	Through Pin D in (b)'s MS connector
E	RS-232C GND	Through Pin E in (b)'s MS connector
F	N.C.	Through Pin F in (b)'s MS connector
G	RS-232C TxD	Through Pin G in (b)'s MS connector
H	RS-232C RxD	Through Pin H in (b)'s MS connector

∗Above specifications are subject to change without notice.

d) AC Input at NJZ1289 (250W AC/DC PSU)
Unit Connector: C016 20C003 200 12 [Amphenol / 3 pins + PE, male]
Mating Connector: C016 20D003 210 12 [Amphenol / 3 sockets + PE, female]
** Mating connector is enclosed in the shipping package of NJZ1289*

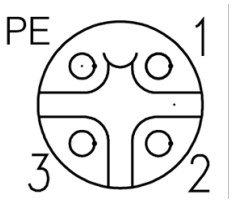

Pin No.	Item	Description
1	L (Live)	100 to 240 V, AC Voltage
2	N (Neutral)	100 to 240 V, AC Voltage
3	N.C.	-
PE	FG	GND

8.3. Connection and Installation

This section describes basic installation for the PSU.

8.3.1. Setting

When installing the PSU, the following guidelines should be complied:

- ✓ Check factors such as accessibility, power, signal, and cable connections and future expansion on the installation location.
- ✓ Plan for access to connector side of the PSU.
- ✓ Arrange the PSU with the connector face down and the fin face up or side.
- ✓ Available to use the mount bracket for Φ76 mast as option parts.

NOTE

✓ Do not block fins of this unit to keep the heat dispassion performance.
Normally the PSU should be mounted with fins face up and the connector face down to keep heat dissipation and waterproof performance.

8.3.2. Connection

Three cables and one wire:

- AC Power Cable
- DC Power & Option Cable between the PSU and BUC
- Option Cable between the PSU and IDU
- Wire for Common Chassis Ground / Frame Ground

1) AC Power Cable

The PSU is directly powered by AC power source (100-240V). Low noise / low transient AC power source is recommended.

The connection of AC power cable should be complied with the following steps:

Step 1: Assemble the AC power cable. Use a power cable with an outer diameter (O.D.) of 6 - 12.5 mm to properly assemble the mating connector (Model: C016 20D003 210 12) included in the shipment package. The connector pin assignment should be referred in Item (d) of Section 8.2.2. The assembly method of mating connector is referred to

appendix. The appropriate three-plug terminal should be selected according to the outlet shape to be used, and assembled to the power cable at the opposite side of the mating connector.

It is available to purchase the AC power cable of P/N: NJZ1290A01 as option part.

Step 2: Connect the mating connector (Model: C016 20D003 210 12) of the AC power cable to the connector of AC Input of the PSU correctly and securely. And for to harden the waterproof structure it is recommended that a cable connection point from the connector to the cable sheath is sealed by usage of self-amalgamating tape.

Do not connect the AC power cable to the AC outlet before all of other connection steps.

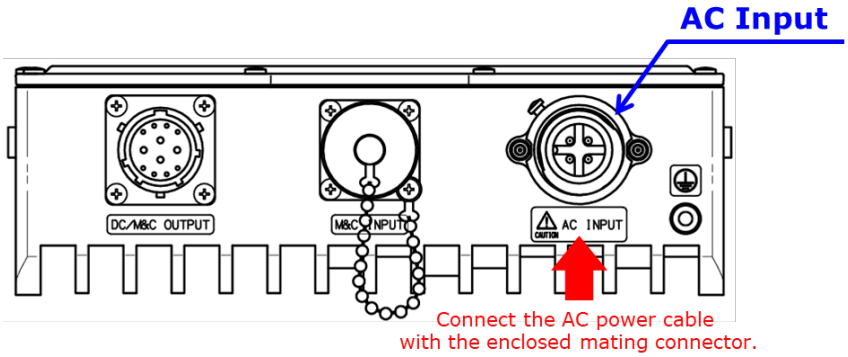

2) DC Power & Option Cable between the PSU and BUC

The PSU supplies +48V DC power to BUC though this connection cable.

The connection of the DC power & option cable between the PSU and BUC should be complied with the following steps:

Step 1: Assemble the DC power & M&C signal cable. Use a signal cable with an outer diameter (O.D.) of 14 mm. The cable length should refer to Section 8.3.4, and for the decision of cable length it is needed to consider the voltage drop due to the conductor resistance of the wires. Properly assemble the mating connector (Model: PT06E-14-12P(470)) included in the shipment package of the PSU to the signal cable. Properly assemble the mating connector (Model: PT06E-14-12S(470)) included in the shipment package of the BUC to opposite side of the aforementioned signal cable. The pin assignment of connectors should be referred in Item (a) and (b) of Section 8.2. The assembly method of mating connector is referred to appendix.

It is available to purchase the DC power & M&C signal cable of P/N: NJZ1290A02 as option part for NJT8318, NJT8319 and NJT8370 series.

Step 2: Connect the appropriate mating connector (Model: PT06E-14-12P(470)) of the DC power & M&C signal cable to the connector of DC & Option Output at the PSU correctly and securely. And for to harden the waterproof structure it is recommended that a cable connection point from the connector to the cable sheath is sealed by usage of self-amalgamating tape.

Step 3: Connect the appropriate mating connector (Model: PT06E-14-12S(470)) of the DC power & M&C signal cable to the connector of DC & M&C Input at the BUC correctly and

securely. And for to harden the waterproof structure it is recommended that a cable connection point from the connector to the cable sheath is sealed by usage of self-amalgamating tape.

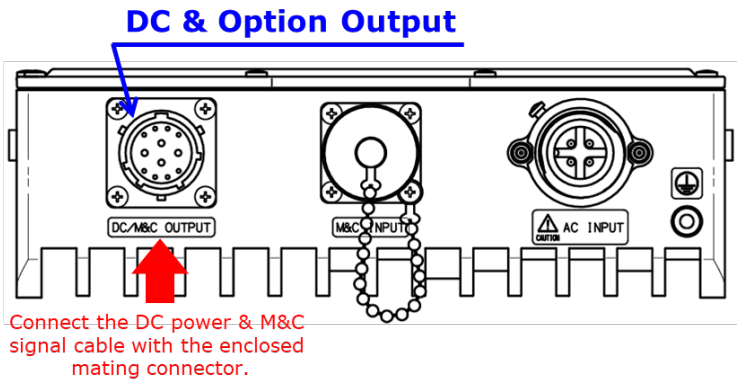

3) Option Cable between the PSU and IDU

Do not remove the waterproof cap except to use Option Port.

When the serial interface M&C such as RS-232C of the connected BUC is used, the serial signal will pass through from the connector of DC & Option Output to this Option Port.

The connection of the option port (M&C signal) cable between the PSU and IDU should be complied with the following steps:

Step 1: Assemble the M&C signal cable. Use a signal cable with an outer diameter (O.D.) of 10.9 mm. The cable length depends on M&C interface specifications, and furthermore for the decision of cable length it is needed to consider length of the aforementioned DC Power & Option Cable. Properly assemble the mating connector (Model: PT06E-12-8S (470)) that is option part (P/N: NJZ1290C05) to the signal cable. The pin assignment of connector should be referred in Item (c) of Section 8.2. The assembly method of mating connector is referred to appendix. The appropriate connector should be selected according to the M&C connection interface of IDU / modem to be used, and assembled to the signal cable at the opposite side of the mating connector.

Step 2: Connect the appropriate mating connector (Model: PT06E-14-12P(470)) of the DC power & M&C signal cable to the connector of DC & Option Output at the PSU correctly and securely. And for to harden the waterproof structure it is recommended that a cable connection point from the connector to the cable sheath is sealed by usage of self-amalgamating tape.

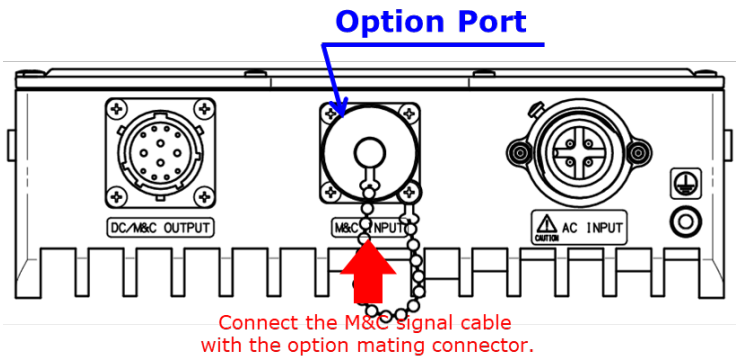

e.g.) Signal Connection of NJT8319UNMR (Ku 16W BUC with RS-232C serial interface M&C)

NJT8319UNMR		NJZ1289 (PSU)				IDU	
a) DC & M&C Input		b) DC & Option Output		c) Option Port		RS-232C	
Pin#	Signal	Pin#	Signal	Pin#	Signal	Pin#	Signal
A	-	A	-	A	-	1	Data Carrier Detect (DCD)
B	-	B	-	B	-	2	Receive Data (RXD)
C	-	C	-	C	-	3	Transmit Data (TXD)
D	-	D	-	D	-	4	Data Terminal Ready (DTR)
E	RS-232C GND	E	RS-232C GND	E	RS-232C GND	5	Ground (GND)
F	-	F	-	F	-	6	Data Set Ready (DSR)
G	RS-232C TxD	G	RS-232C TxD	G	RS-232C TxD	7	Request to Send (RTS)
H	RS-232C RxD	H	RS-232C RxD	H	RS-232C RxD	8	Clear to Send (CTS)
J	DC Input (+)	J	DC Input (+)			9	Ring Indicator (RI)
K	DC Input (-)	K	DC Input (-)				
L	-	L	-				
M	-	M	-				

4) Wire for Common Chassis Ground / Frame Ground

The PSU can be had the chassis ground of the other equipment (e.g. modem) in common. Connecting wire for common chassis ground from the chassis ground of the other equipment should be complied with the following step:

Tools Required: #2 Phillips screwdriver

Step: Connect the wire from ground on the other equipment to the chassis ground with M4 x 8 mm Philips pan head screw.

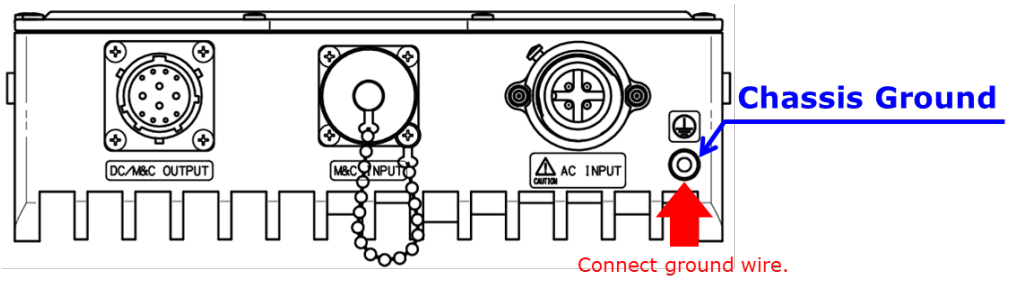

⚠ CAUTION

✓ DC power of +48 V will output at DC output interface connector. Do not connect the other than cable connected from the +48V operable BUC. The connected equipment may be damaged when cable connecting modem, the BUC other than the +48V operable BUC, or other equipment.

＊Above specifications are subject to change without notice.

NOTE

- ✓ Do not connect the AC power cable to the AC outlet before all of other connection steps.
- ✓ To reduce the risk of damage or broken by lightning surge, the unit should be grounded by connecting the ground wire.
- ✓ Do operate with the input voltage range between +100 and +240 V AC power. Avoid applying more than the maximum voltage in this range under any conditions.
- ✓ Do seal all of cable connection points from the connector to the cable sheath by usage of self-amalgamating tape for to harden the waterproof structure

8.3.3. Start-up

Start-up will be immediately performed with the following step:

Step: Connect the AC power cable to the AC outlet

8.3.4. Recommendation Cable between PSU to BUC

Type and length of the signal cable from the PSU to BUC need to be chosen to satisfy that the PSU output less than 250 W DC power, and an input voltage of BUC is more than input minimum voltage such as 36 V.

The chart for total resistance* and maximum length is referred in below.

BUC Model	DC Power Requirement of BUC		Total Resistance	Maximum Length		
	Minimum Input Voltage	Maximum Power Consumption		**0.5 SQ** Wire Cable	**0.75 SQ** Wire Cable	**1.25 SQ** Wire Cable
NJT8318 series	+18 V	90 W	6.4 Ω	---	123 m	200 m
NJT8319 series	+36 V	180 W	2.3 Ω	---	44 m	71 m
NJT8370 series	+36 V	230 W	0.7 Ω	---	13 m	21 m

(*Note: Total resistance means sum number of both prime wire and return wire resistance.)

9. Option Parts

Contact to following email address, when option parts are needed.

Email: mcsales@njr.co.jp

9.1. AC Power Cable - P/N: NJZ1290A01

Connection Cable between the PSU (NJZ1289) and AC Outlet

- ✓ Length: 3m
- ✓ Weatherized Cable
- ✓ AC Mating Connector Assembled
- ✓ No Assembly at AC Outlet Side

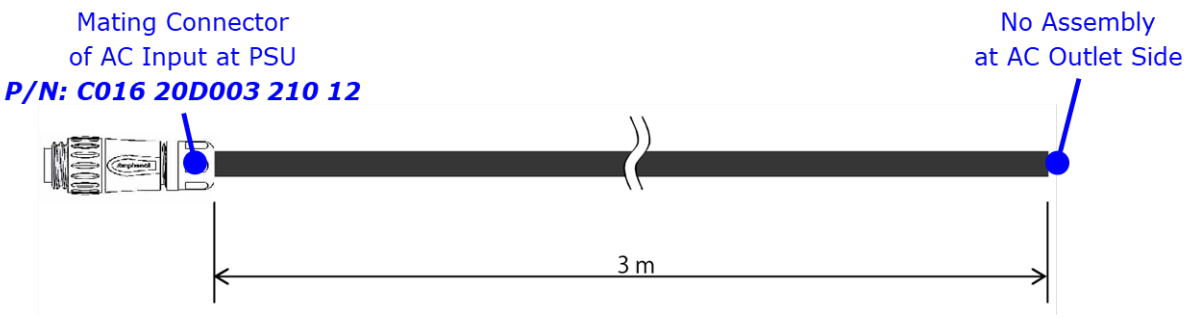

9.2. DC Power & M&C Signal Cable - P/N: NJZ1290A02

Connection Cable between the BUC and the PSU (NJZ1289)

- ✓ Length: 5m
- ✓ Weatherized Cable
- ✓ Two Mating Connectors Assembled

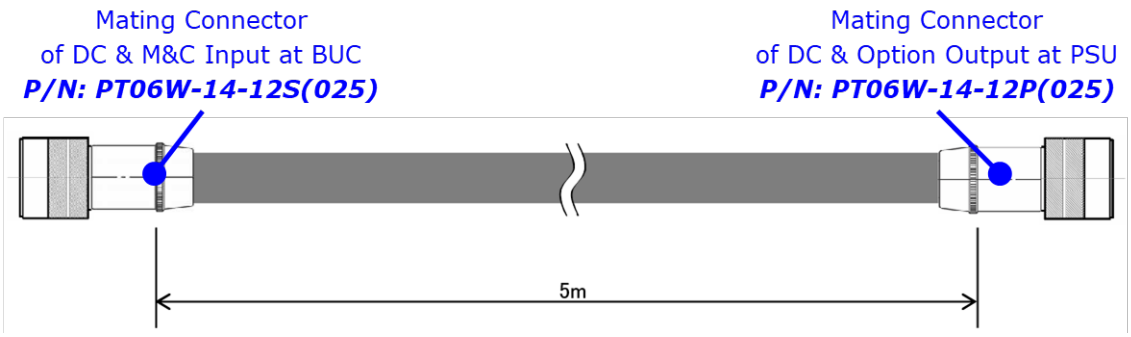

9.3. Option Port Mating Connector - P/N: NJZ1290C05

Mating Connector for Option Port of the PSU (NJZ1289)

- ✓ PT06E-12-8S(470) [Amphenol / 8 sockets, female]

＊Above specifications are subject to change without notice.

9.4. Mount Bracket for Φ76 Mast - P/N: NJZ1290D02

This option part is to mount the PSU to Φ76 Mast.

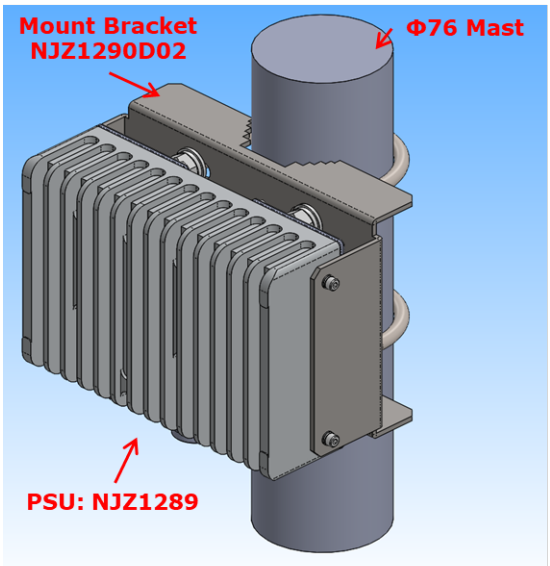

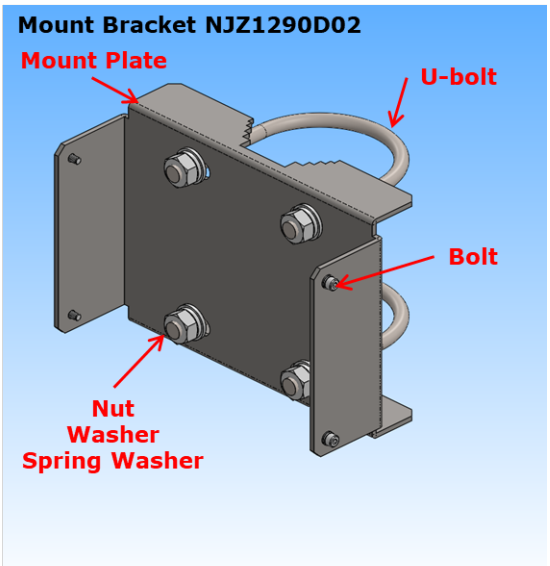

Item	Qty	Description
Mount Plate	1	SUS
Bolt	4	SUS, M4, with W & SW, for fixing PSU
U-bolt	2	SUS, 65A(2-1/2”), M10
Nut	4	SUS, M10
Washer	4	SUS, for M10
Spring Washer	4	SUS, for M10

This appendix mentions about cable assembly of mating connector.

Cable Assembly of Mating Connector for Amphenol eco|mate and PT Series Connector

1. Amphenol eco|mate Series Connector

Applicable Connector:

- C016 20D003 210 12 for AC Input at PSU

Assembly Procedure Steps:

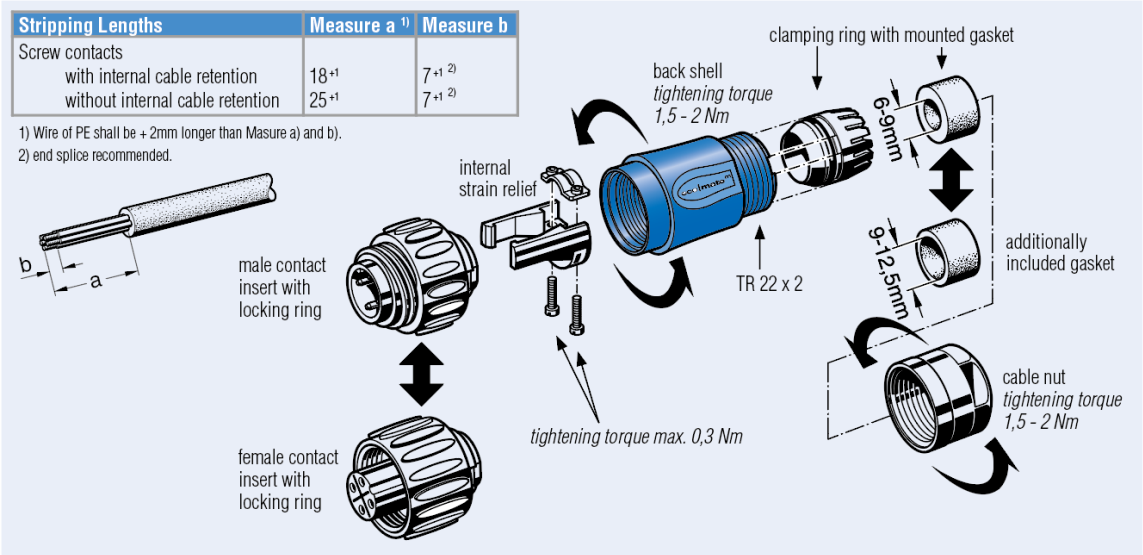

Fig.1 Connector Exploded View and Cable/Wire Strip Length

Step 1: Prepare an AC cable with the wanted length. Use the cable with core wire conductor size of AWG #18 to #14 and an outer diameter (O.D.) of 6 to 12.5 mm. When using the internal strain relief (cable retention) the cable should be the O.D. of 6 to 10 mm.

Step 2: Strip the prepared cable including internal core wires by condition with dimensions of Fig.1.

Step 3: Thru the cable nut, the mounted gasket, the clamp ring, and the back shell in this order to the cable.

Step 4: Twist core wires as shown in below and insert wires to contacts of the female contact insert with locking ring.

Step 5: While fixing the wire, tighten the screw attached to the female contact body with a flathead screwdriver.

Screw Size: M3

Recommendation Tighten Torque of Screw: 0.5 N·m

＊Above specifications are subject to change without notice.

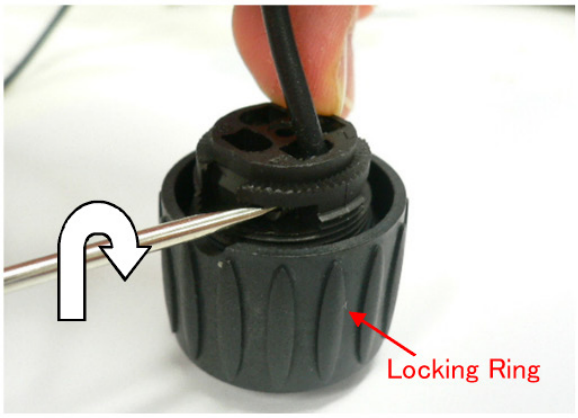

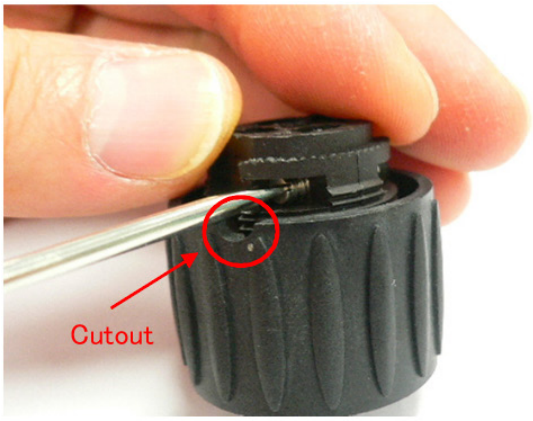

* The locking ring shall be aligned with the cutout position to the screw position.

Screwdriver Tip Shape	
Do use	Do not use

* Recommended diameter of flathead screwdriver: 3mm or less
(The outer diameter of the driver tip is recommended to be a straight type that does not exceed the shaft diameter)

Step 6: Fit in connector parts such as the cable nut and the back shell to the female contact.

1) Attach the internal strain relief to the cable with tightening screws. (When using the internal strain relief)
   * Strain relief is the part that supports the cable.
   Recommendation Tighten Torque of Screw: 0.3 N·m
2) Straightly tighten the back shell to the female contact while fixing the female contact so that it does not rotate.
   Recommendation Tighten Torque of Back Shell: 1.5 to 2.0 N·m

Correct Assembly	Incorrect Assembly
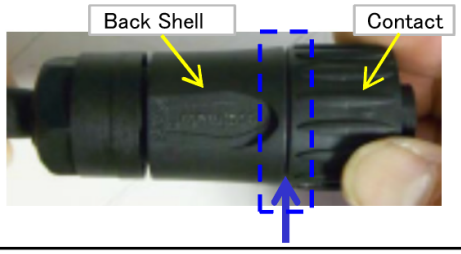	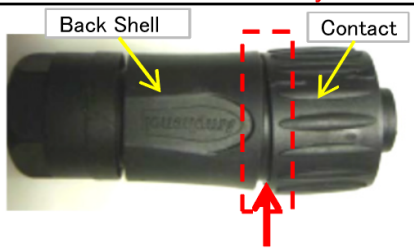

* Do not tighten it diagonally to keep waterproof structure.

3) Attach the clamping ring and the mounted gasket to the back shell, and straightly tighten the Cable Nut to the back shell. The mounted gasket shall be selected from 6 - 9 mm type and 9 - 12.5 mm type according to the outer diameter (O.D.) of the cable.
   Recommendation Tighten Torque of Cable Nut: 1.5 to 2.0 N·m

2. Amphenol PT Series Connector

Applicable Connector:

- PT06E-14-12S(470) for DC & M&C Input at BUC
- PT06E-14-12P(470) for DC & Option Output at PSU
- PT06E-12-8S(470) for Option Port at PSU

Assembly Procedure Steps:

Step 1: Prepare a signal cable with the wanted length. Use the cable with core wire conductor size and an outer diameter (O.D.) in below.

	PT06E-14-12S(470) PT06E-14-12P(470)	PT06E-12-8S(470)
Layout / Pin Assignment (Mating face view of pin inserts) Contact Type: ○ = #20 ● = #16	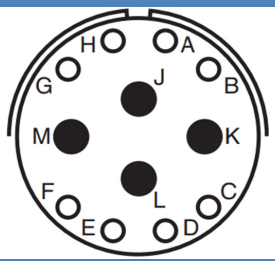	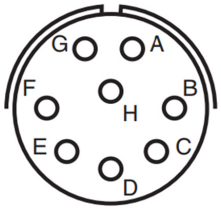
Shell Size	Shell-14	Shell-12
Contact Number	8 contacts - #20 4 contacts - #16	8 contacts - #20
Outer Diameter	14 mm max.	10.9 mm max.

Contact Type	#20	#16
Wire Size	AWG #20 to #22	AWG #16 to #18
Wire Stripping Length	3.7 to 4.2 mm	5.3 to 5.8 mm

Table 1 Description of Connector / Cable / Wire

Step 2: Strip the outer sheath and filler with up to 50 mm and strip the wire insulations with Wire Stripping Length by wire-stripper in Table 1. Treat the stripped wires with Rosin-flux of within-expired-date and immediately pre-solder the stripped wires with Rosin core solder.

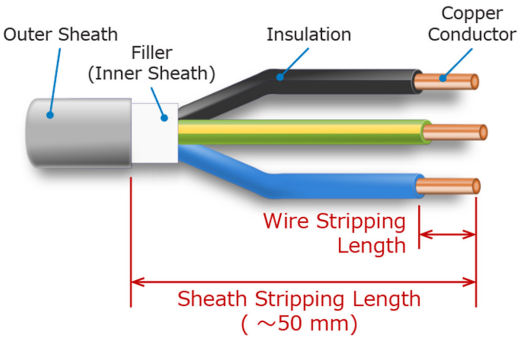

NOTE

✓ Notice that any damage of the wire insulations when stripping the outer sheath and filler shall be avoided.

＊Above specifications are subject to change without notice.

Step 3: Disassembly a cable clamp, endbell, compression ring, and grommet from the connector body.

Insert the cable clamp, endbell, and compression ring to the prepared signal cable in the order of the cable clamp, endbell, compression ring.

Insert wires to the grommet under condition matched the pin assignment of contacts and wires.

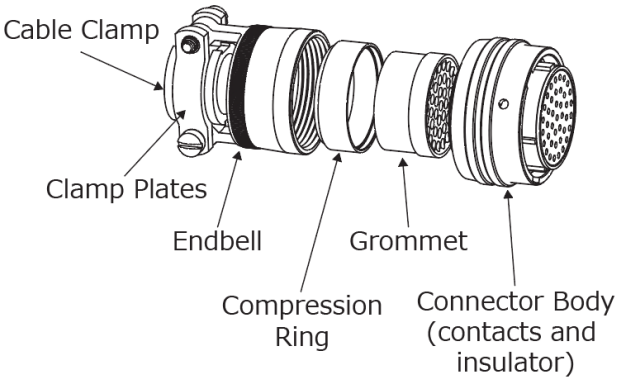

Step 4: Solder all of contacts and wires under condition with the pin assignment. It is recommended to arrange so that the contact cuts are upward for easy-soldering.

Cleanse the flux at soldering points with ethyl-alcohol and etc.

NOTE

✓ Notice that insulator of the connector body shall be avoided to deform.

Step 5: Slide the grommet to the connector body until it hits the back of the insulator, and insert the compression ring to the step edge of the grommet.

Tighten the endbell to the connector body with following torque met for shell size.

Shell Size	Tighten Torque	Connector P/N
Shell-12	3.5 to 4 N·m	PT06E-12-8S(470)
Shell-14	4.6 to 5.1 N·m	PT06E-14-12S(470) PT06E-14-12P(470)

When a gap between the cable clamp and wires is 1 mm or more, wrap wires at the cable clamp point with a self-amalgamating tape so that the gap is 1 mm or less. Set the cable clamp at wires of the cable clamp point. And clamp the cable clamp with two clamp plates, which will be fixed with enclosed flat head screws to the endbell.

Wrap both the cable and connector with a self-amalgamating tape from outer sheath of cable to the middle of endbell like as shown in the range of arrows in following image.

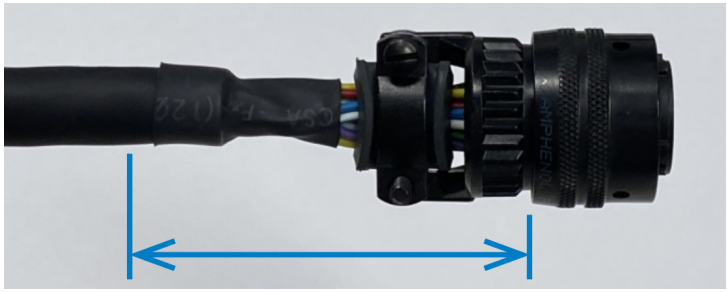

＊Above specifications are subject to change without notice.